BI5U-EM18-AN6X-H1141
Inductive Sensor

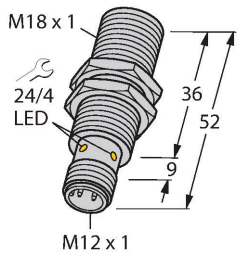

Features

- Threaded barrel, M18 x 1
- Stainless steel, 1.4301
- Factor 1 for all metals
- Protection class IP68
- Resistant to magnetic fields
- Extended temperature range
- High switching frequency
- DC 3-wire, 10…30 VDC
- NO contact, NPN output
- M12 x 1 male connector

Wiring diagram

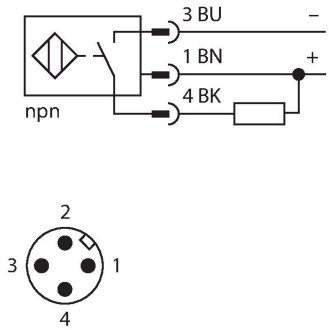

Technical data

Type	BI5U-EM18-AN6X-H1141
ID	1635350
General data	
Rated switching distance	5 mm
Mounting conditions	Flush
Secured operating distance	≤ (0.81 × Sn) mm
Repeat accuracy	≤ 2 % of full scale
Temperature drift	≤ ±10 %
	≤ ± 15 %, ≤ -25 °C v ≥ +70 °C
Hysteresis	3…15 %
Electrical data	
Operating voltage U_B	10…30 VDC
Ripple U_{ss}	≤ 10 % U_{Bmax}
DC rated operating current I_e	≤ 200 mA
No-load current	≤ 25 mA
Residual current	≤ 0.1 mA
Isolation test voltage	0.5 kV
Short-circuit protection	yes/Cyclic
Voltage drop at I_e	≤ 1.8 V
Wire break/reverse polarity protection	yes/Complete
Output function	3-wire, NO contact, NPN
DC field stability	300 mT
AC field stability	300 mT_{ss}
Insulation class	⧈
Switching frequency	2.5 kHz
Mechanical data	
Design	Threaded barrel, M18 x 1

Functional principle

Inductive sensors are designed for wear-free and contactless detection of metal objects. uprox Factor 1 sensors have significant advantages due to their patented ferrite-coreless multi-coil system. They detect all metals at the same large switching distance and are resistant to magnetic fields.

BI5U-EM18-AN6X-H1141| 21-02-2025 14-53 | Technical modifications reserved

Technical data

Dimensions	52 mm
Housing material	Stainless steel, 1.4301 (AISI 304)
Active area material	Plastic, PBT
Max. tightening torque of housing nut	25 Nm
Electrical connection	Connector, M12 × 1
Environmental conditions	
Ambient temperature	-30…+85 °C
Vibration resistance	55 Hz (1 mm)
Shock resistance	30 g (11 ms)
Protection class	IP68
MTTF	874 years acc. to SN 29500 (Ed. 99) 40 °C
Switching state	LED, Yellow

Mounting instructions

Mounting instructions/Description

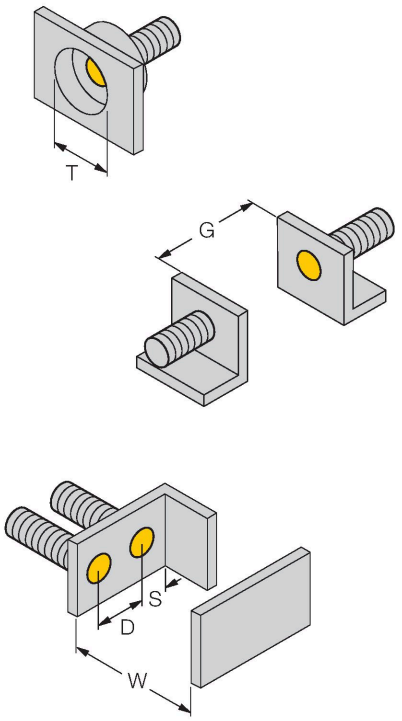

Distance D	2 x B
Distance W	3 x Sn
Distance T	3 x B
Distance S	1.5 x B
Distance G	6 x Sn
Diameter active area B	Ø 18 mm

BI5U-EM18-AN6X-H1141| 21-02-2025 14-53 | Technical modifications reserved

Accessories

MW18	6945004

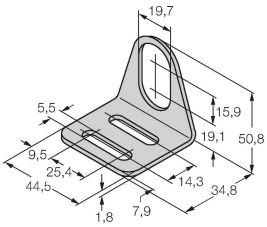

Mounting bracket for threaded barrel sensors; material: Stainless steel A2 1.4301 (AISI 304)

BSS-18	6901320

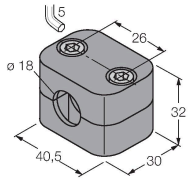

Mounting clamp for smooth and threaded barrel sensors; material: Polypropylene

QM-18	6945102

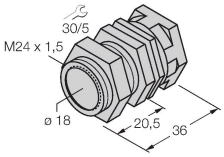

Quick-mount bracket with dead-stop; material: Chrome-plated brass. Male thread M24 × 1.5. Note: The switching distance of the proximity switches may change when using quick-mount brackets.

Accessories

Dimension drawing	Type	ID	
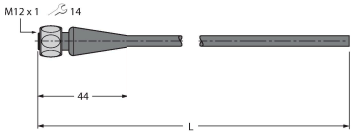	RKH4-2/TFE	6935482	Connection cable, M12 female connector, straight, 3-pin, stainless steel coupling nut, cable length: 2 m, jacket material: PVC, gray; temperature range: -25…+80 °C
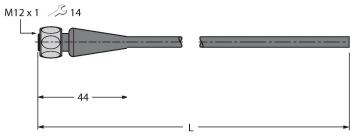	RKH4-2/TFG	6934384	Connection cable, M12 female connector, straight, 3-pin, stainless steel coupling nut, cable length: 2 m, jacket material: TPE, gray; temperature range: -40…+105 °C

BI5U-EM18-AN6X-H1141| 21-02-2025 14-53 | Technical modifications reserved